Rev.	Change Description	ECN #	Date
B	新增防水圈	ECN20250723-2	

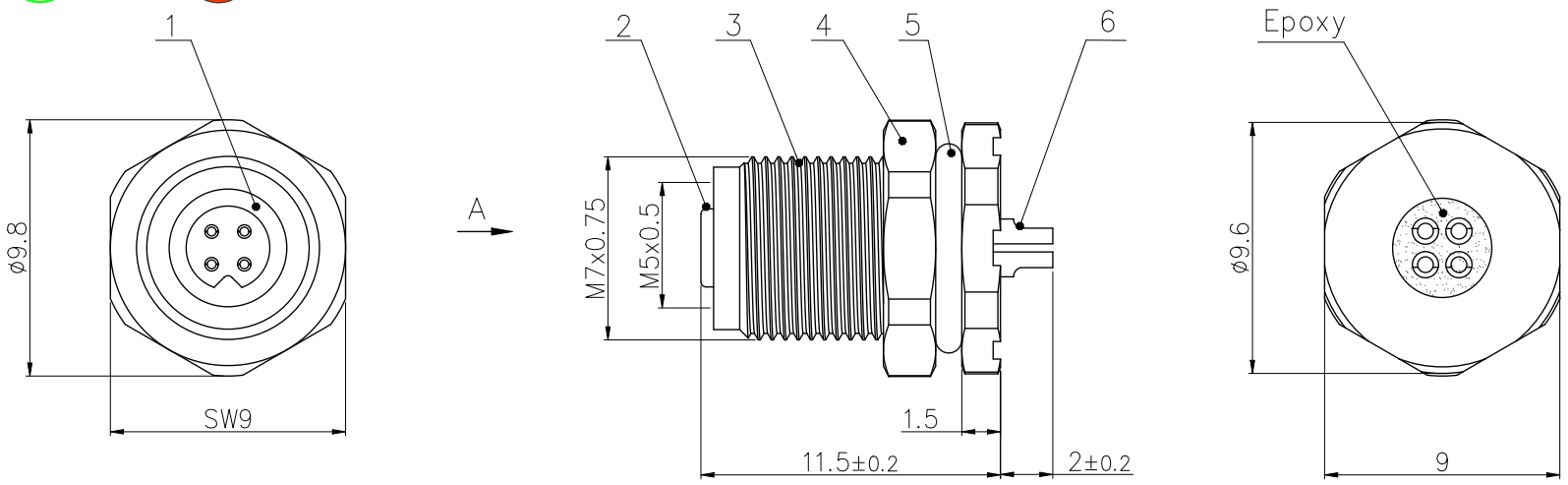

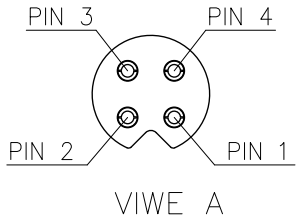

VIWE A

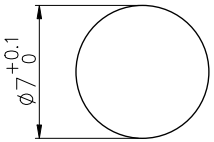

BOARD END HOLE OPENING SIZE

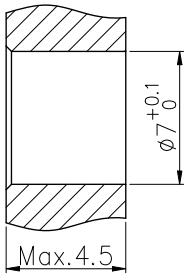

No.	Specification	Unit	Q'ty
6	M5 Female contact pin, copper gold plated	pc	4
5	M5 Shell O-ring ø8X1 , Rubber black	pc	1
4	Hexagon nut M7X0.75, brass nickel plated	pc	1
3	M5 Panel back mount Female socket shell, brass nickel plated	pc	1
2	M5 Female Insulator 4 core, PA+GF black	pc	1
1	Rubber ringsϕ3.5*ϕ2.5*0.5 black	pc	1

Technical specifications:		Materials:	
Coupling:	Threaded coupling	Shell material:	Copper nickel plated
Termination:	Soldering	Contact material:	Copper Gold plated
Coding:		Insert material:	PA66+GF UL94 black
Pollution degree:	3	Sealing:	Rubber
Temperature range:	−40℃ ~ +85℃		
Degree of protection:	IP67 when mated		
Mating cycles:	≥500		
Rated voltage:	60V AC/DC		
Rated current:	1A		
Contact resistance:	≤5 mΩ		
Insulation resistance:	≥100 MΩ		
All materials are RoHS compliant			

GENERAL TOLERANCE (UNLESS SPECIFIED) ≤10 ±0.1 <10~≤20 ±0.2 <20~≤50 ±0.5 Angle ±1°	DWN	C. J. J 2025. 1. 18		CAZN 正成	
	CHK				
	APVD			TITLE	M5 Female Back Mount Socket 4 Core
THIRD ANGLE	UNIT	MM	REV A	PART NO	C110201-00010
	SIZE	A4	SHEET 1 OF 1	DRAWING NO	M5-S4-GWFM7