Rev.	Change Description	ECN #	Date

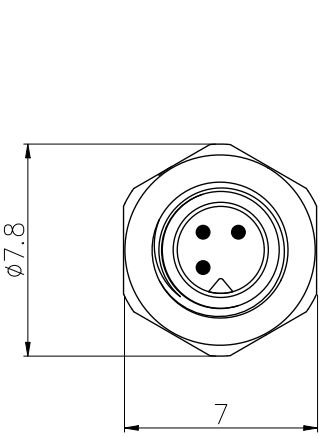

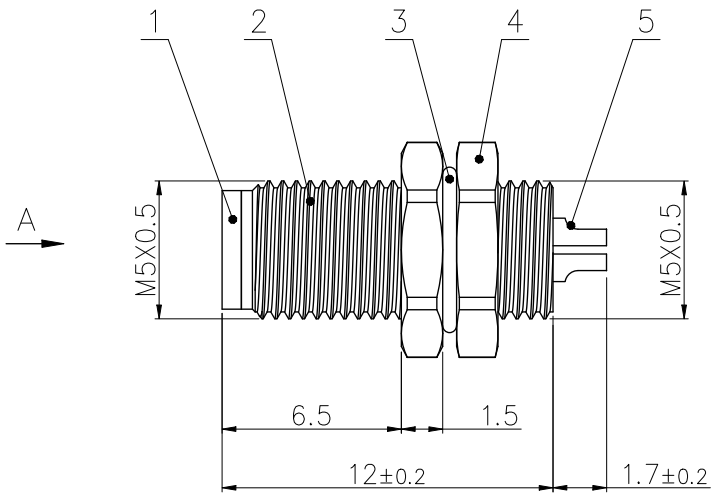

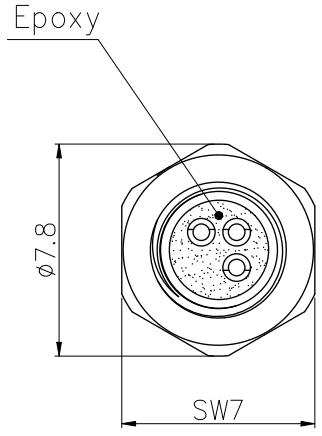

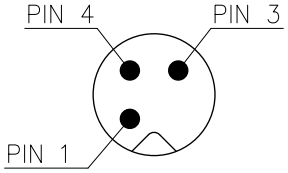

VIWE A

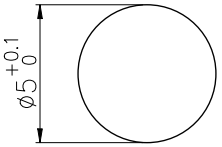

BOARD END HOLE OPENING SIZE

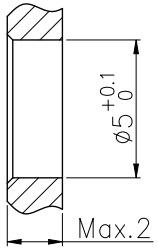

Technical specifications:		Materials:	
Coupling:	Threaded coupling	Shell material:	Copper nickel plated
Termination:	Soldering	Contact material:	Copper Gold plated
Coding:		Insert material:	PA66+GF UL94 black
Pollution degree:	3	Sealing:	Rubber
Temperature range:	−40℃ ~ +85℃		
Degree of protection:	IP67 when mated		
Mating cycles:	≥500		
Rated voltage:	60V AC/DC		
Rated current:	1A		
Contact resistance:	≤5 mΩ		
Insulation resistance:	≥100 MΩ		
All materials are RoHS compliant			

No.	Specification	Unit	Q'ty
5	M5 Male contact pin, brass gold plated	pc	3
4	Hexagon nut M5X0.5, brass nickel plated	pc	1
3	M5 Shell O-ring ø5X0.8, Rubber black	pc	1
2	M5 Panel front mount male socket shell, brass nickel plated	pc	1
1	M5 Male Insulator 3 core, PA+GF black	pc	1

GENERAL TOLERANCE (UNLESS SPECIFIED)						
≤10 ±0.1 <10~≤20 ±0.2 <20~≤50 ±0.5 Angle ±1°	DWN	W.M 2025.1.6			CAZN® 正成	
	CHK					
	APVD				TITLE	M5 Male Front Mount Socket 3 Core
THIRD ANGLE	UNIT	MM	REV	A	PART NO	C110201-00001
	SIZE	A4	SHEET	1 OF 1	DRAWING NO	M5-P3-GWBM5